SEA CONTROL THROUGH THE EYES OF THE PERSON WHO DOES IT

A Theoretical Field Analysis

Christofer Waldenström

This article suggests a new perspective on the old problem of protecting ships at sea, for two reasons. First, although screen tactics and other defensive measures have been developed and used for many years, this new perspective will be useful in addressing two developments since the late nineteenth century: attackers are no longer just other ships but also aircraft, submarines, and, recently, missiles with very long ranges launched from the land; also, torpedo boats, coastal submarines, and mines have complicated operations in congested and archipelagic waters. The second reason for a new approach is that in order to support commanders in the problems of sea control we need to study the issues they encounter while solving them. This requires a description of each task that commanders have to do; without such a description it becomes difficult to determine which actions lead to increased control and which to loss of control, which in turn makes it harder to identify whether commanders are running into trouble and if so, why. The new analytical method introduced here represents an attempt at such a description. As such, it may enrich and extend traditional thinking about sea control and how to achieve it, especially in littoral waters.

Dr. Waldenström works at the Institution of War Studies at the Swedish National Defence College. He is an officer in the Swedish Navy and holds an MSc in computer science and a PhD in computer and systems sciences. His dissertation focused on human factors in command and control and investigated a support system for naval warfare tasks. Currently he is working as lead scientist at the school's war-gaming section, and his research focuses on learning aspects of war games.

Sea control is generally associated with the protection of shipping, and it refers normally either to a stationary patch of water, such as a strait, or to a region around a moving formation of ships. Today it is quite well understood how to protect such a region of water. To handle aircraft and missiles, defenses are organized in several layers, with an outer layer of combat air

patrols to take out enemy aircraft before they can launch their weapons. Next is a zone where long- and short-range surface-to-air missiles take down missiles that the enemy manages to fire. Any "leakers" are to be handled by soft-kill and hard-kill point defenses—for example, jammers, chaff, and close-in weapon systems. For submarines and surface vessels the logic is similar, but here maneuver is also an option. Since the attacking surface ship or submarine moves at about the same speed as the formation, it is possible to stay out of reach of the enemy. Maneuver seeks to deny detection and targeting and to force attacking surface ships and submarines to operate in ways in which they cannot muster enough strength to carry out their mission or are more easily detected.[1]

A prerequisite of a successful layered defense is detection of the enemy far enough out that all the layers get a chance to work. The restricted space of congested and archipelagic waters, however, may prevent the outer "strainers" from acting on the enemy. This gives small, heavily armed combatants opportunities to hide, perhaps among islands, and fire their weapons from cover, leaving only point defenses to deal with the oncoming missiles and torpedoes, with little room for maneuver.[2] This increases the risk of saturation of defense systems and may allow weapons to penetrate.

The problems associated with archipelagic and coastal environments have been recognized since the introduction of the mobile torpedo.[3] The torpedo gave small units the firepower to destroy ships much larger than themselves and made it possible for a small fleet to challenge a larger one, at least if it did not have to do so on the open ocean. To deal with such an inshore threat, the British naval historian and strategist Sir Julian Corbett suggested in 1911 that a "flotilla" of small combatants had to be introduced to deal with this type of warfare, because capital ships could no longer approach defended coasts, as they had when ships of the line dueled with forts.[4] Today, the introduction of long-range missiles, mines, stealth design, and the ability to coordinate the efforts of land-, sea-, and air-based systems have further intensified this threat.[5]

Littoral environments seem to change the problem of sea control, at least in some aspects.[6] Sensors, weapons, and tactics developed to handle threats on the open ocean may be less appropriate in congested and archipelagic waters. Radar and sonar returns are cluttered, missile seekers are confused, and targeting is complicated by the existence of islands and coastlines close to the ships to be protected. The land-sea environment introduces variables that make the sea-control problem hard to solve using methods developed for an open ocean. As the uncertainties and intangibles mount up, quantitative approaches become less feasible, and we can only rely on human judgment.[7] That is why it is important to study what commanders find difficult when executing sea-control missions in littoral environments.

It has been shown to be fruitful, when studying the problems people face when trying to solve a task, to have a model of the task that describes what the decision maker is required to do.[8] Whether that task description takes the form of a document—a formal description or formula—or an expert, the approach is similar—you compare people's behavior to the description and try to identify where and why they differ. Since experts differ, formal descriptions are preferable, if feasible. For the sea-control task, the description can either list the problems that the commander must solve in order to get ships safely to their destinations or define the variables of interest and the states they must be in for sea control to be considered established.

To get a description of what is required to establish sea control one can study what doctrine has to say. A major U.S. Navy doctrinal publication, *Naval Warfare,* characterizes sea control as one of the service's core capabilities and states that it "requires control of the surface, subsurface, and airspace and relies upon naval forces' maintaining superior capabilities and capacities in all sea-control operations. It is established through naval, joint, or combined operations designed to secure the use of ocean and littoral areas by one's own forces and to prevent their use by the enemy."[9] *British Maritime Doctrine* has a similar description of sea control: "Sea control is the condition in which one has freedom of action to use the sea for one's own purposes in specified areas and for specified periods of time and, where necessary, to deny or limit its use to the enemy. . . . Sea control includes the airspace above the surface and the water volume and seabed below."[10] A North Atlantic Treaty Organization publication, *Allied Joint Maritime Operations,* relates the level of control to the level of risk: "The level of sea control required will be a balance between the desired degree of freedom of action and the degree of acceptable risk."[11] Two academic analysts offer a more minimalistic view, arguing that tying the definition of sea control to specific military objectives creates contrasts between the challenges posed by, for example, littoral environments and blue-water environments.[12] To accommodate these contrasts and allow for the full range of operations, they put forward "the use of the sea as a maneuver space to achieve military objectives" as a definition of sea control.

However, two issues make it hard to use these descriptions for studying the problems commanders face in sea-control tasks. To say so is not to criticize their doctrinal utility but rather to point out that for the purposes of this article, their meanings need to be expressed in a somewhat more formal way. The first issue is related to how the definitions describe when sea control has been established. All these definitions describe sea control from a general perspective, as a *state,* implying a line between when that state has been reached and when it has not. As result, it would be possible to use such a description to determine whether sea control has been established, at least in theory. A necessary precondition of such

a description, however, is that it contain concepts—or to be more specific, a set of variables—that can be observed from the outside. For each variable there must be specified the value it must have, or the condition it must be in, in order to say that the overall state has been reached. Only then are we able to use the definition to measure whether a commander has succeeded in establishing sea control.

The second issue regards the "general," "outside" perspective that characterizes all these descriptions—a conceptual view, detached from the environment, the task, and the decision maker. In a sea-control task, however, several factors, variables, need to be considered in order to determine the degree to which the commander has managed to solve it: geography, type and duration of the operation, the enemy's units and weapons, own resources, and the size of the region are just a few examples. A description covering all possible aspects of sea control and all possible situations would probably be quite complicated, containing many variables and many states; new variables not considered at the beginning might even have to be added as they arise.[13] This is not an attractive situation for a scientific concept. Another approach would go in the other direction, stripping the definition of variables and formulating it on a very general level (the academic definition cited above is such an attempt).[14] Such a definition covers a wide range of situations, but it is not very specific and provides no guidance as to when sea control has been established.

It would seem, then, that defining sea control from a general perspective is not helpful for present purposes. The point is to not separate the definition of sea control from the person trying to achieve it, or from the environment, or from the task. Such a definition would assume the perspective of the commander, describe sea control as a task that the commander has to accomplish, and lay out what is required to accomplish that task.[15] Such a definition could, as we have postulated about the analytical definition we need, either describe the problems that the commander must solve in order to protect the ships or be a representation of the sea-control task. Such a description would allow systematic investigation of the effects of different tasks and different environments on the commander's ability to establish sea control.

In fact, I argue, to investigate the concept empirically, sea control is best described from the inside. Taking the perspective of commanders trying to achieve control makes it possible to investigate systematically the problems they face and in turn, perhaps, to derive guidance for the design of training and support systems. The point of departure for such a description is the idea that securing control at sea is analogous to establishing a "field of safe travel," a concept that has been proposed to describe the behavior of automobile drivers.[16] This approach can be useful for investigating the problems commanders at sea face, and it may enrich and extend traditional thinking about sea control and how to achieve it, especially in littoral waters.

THE FIELD OF SAFE TRAVEL

Driving a car has been described analytically as locomotion through a terrain or a field of space. The primitive function of locomotion is to move an individual from one point of space to another, the "destination." In the process obstacles are met, and locomotion must be adapted to avoid them—collision may lead to bodily injury. Locomotion by some device, such as a vehicle, is, at this level of abstraction, no different from walking, and accordingly it is chiefly guided by vision. This guidance is given in terms of a path within the visual field of the individual, such that obstacles are avoided and the destination is ultimately reached.

The visual field of a driver is selective, in that the elements of the field that are pertinent to locomotion stand out and are attended to, while irrelevant elements recede into the background. The most important part of this pertinent field is the road. It is within the boundaries of the road that the "field of safe travel" exists.[17] The field of safe travel is indefinitely bounded and at any given moment comprises all the possible paths that the car may take unimpeded (see figure 1). The field of safe travel can be viewed as a "tongue" that sticks out along the road in front of the car. Its boundaries are determined by objects that should be avoided. An object has valence, positive or negative, in the sense that we want to move toward some (positive valence) and away from others (negative valence). Objects of negative valence have a sort of halo of avoidance, which can be represented by "lines of clearance" surrounding it. The closer to the object the line is, the greater the intensity of avoidance it represents. The field of safe travel itself has positive valence, the more so along its midline.[18]

The field of safe travel is a spatial field. It is, however, not fixed in physical space but moves with the car through space. The field is not merely a subjective experience of the driver but exists objectively as an actual field in which the car can operate safely, whether or not the driver is aware of it. During locomotion it changes constantly as the road turns and twists. It elongates and contracts, widens and narrows, as objects encroach on its boundaries.

It is now possible to investigate how the concept of a "field of safe travel" applies to naval warfare. As stated above, the purpose of sea control is to take control of maritime communications, whether for commercial shipping or naval forces. The practical problem for a commander is consequently to protect commercial vessels and warships as they move toward their destinations. These ships will be referred to as "high-value units."

The analogy is straightforward: to make sure that the high-value units get safely to their destinations the commander must create a "field of safe travel" where they can move without risk of being sunk. At the simplest level, without the complication of hostile opposition, the problem of maneuvering a high-value unit is exactly the same as that of driving a car: make sure that it gets to its destination without running into something (that is, for a vessel, colliding or running

FIGURE 1
THE FIELD OF SAFE TRAVEL AND THE MINIMUM STOPPING ZONE OF A DRIVER IN TRAFFIC

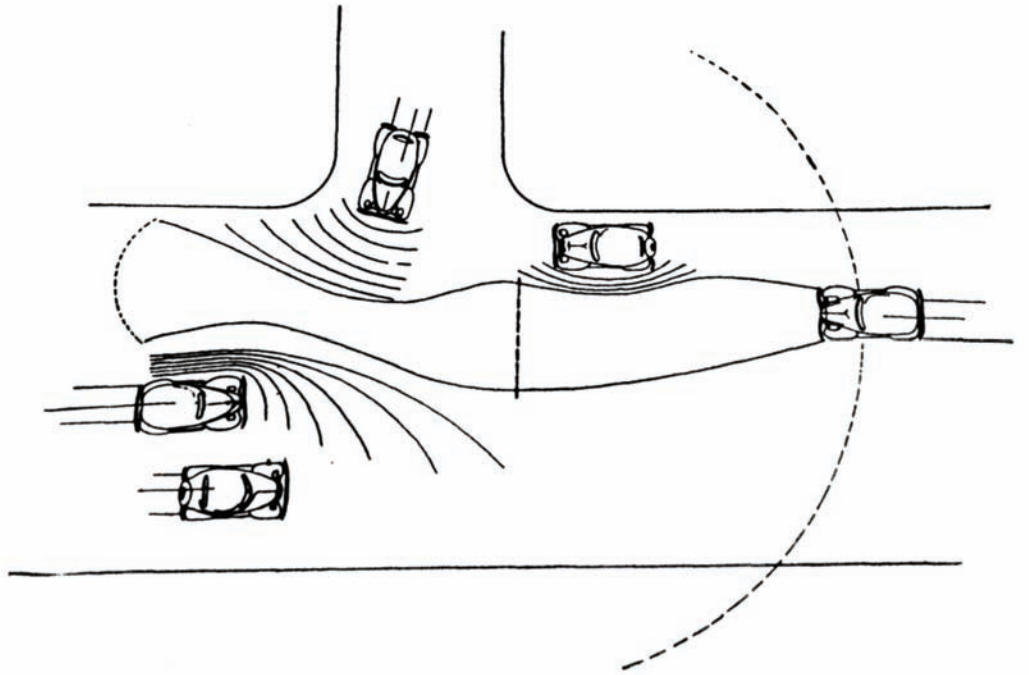

Original figure caption: "If, in this and the following figures, the page is turned around and the figure is viewed from what is now right, the reader may the better be able to empathize the situation, since he will then have the point of view of the driver of the car whose field of safe travel is under discussion." From *American Journal of Psychology.* Copyright 1938 by the Board of Trustees of the University of Illinois. Used with permission of the authors and the University of Illinois Press.

aground). As such, there is no difference between a high-value unit's field of safe travel and an automobile's.

The fields of individual ships are, however, not of interest here and will not be further discussed; our focus is the field of the commander of the naval operation. In that field, the most pertinent element of the environment is not the terrain (though coasts and islands delimit how the ships can move) but the enemy. Consequently, the boundaries of the commander's field of safe travel are determined most importantly by enemy units that threaten to sink the commander's high-value units (see figure 2). In contrast to fixed objects in a driver's field of safe travel, islands and coastlines may actually have positive valences for a commander, as they can offer protection. Nevertheless, the definition of the field remains the same: *the commander's field of safe travel comprises all the possible paths that the high-value units can take unimpeded*.

Though the analogy is straightforward, there are several differences between the driver's field of safe travel and that of the commander. First, the driver of a car has limited ability to influence the shape of the field of safe travel and can only see and react to obstacles that encroach on the field. Commanders, on the other hand, can actively shape the field of safe travel and have powerful means

FIGURE 2

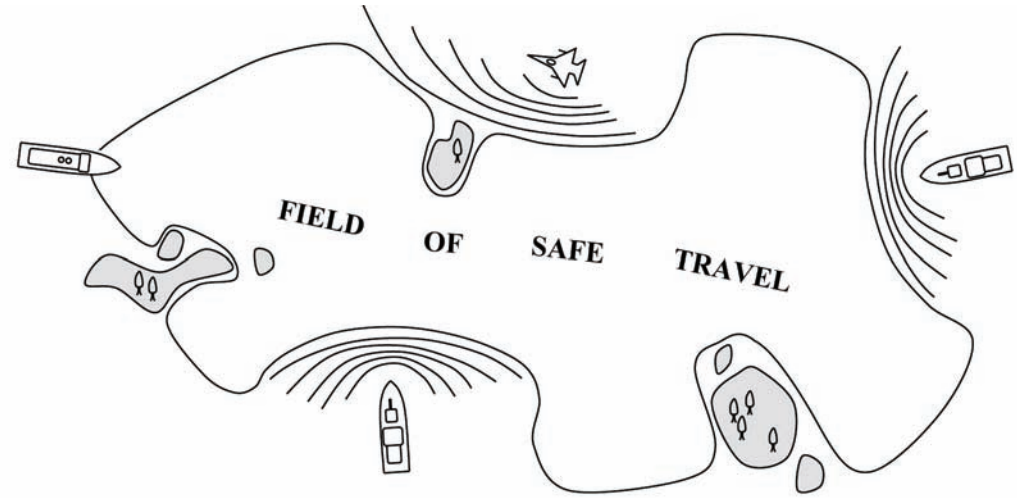

For the commander of a naval operation, the field of safe travel is delimited not only by the terrain but also by, most importantly, threatening enemy units.

to do so: they can scout threatening areas to determine whether enemy units are present, and if they detect a threat they can eliminate it by applying deadly force. Second, the commander is up against an enemy who means to do harm. An opponent who uses cover and deception can make it more difficult to establish the requisite field.

Third, the commander's field of safe travel cannot, like the field of a driver of an automobile, be directly perceived; it is too vast. Instead, the commander must *derive* the field, using data provided by sensors carried by the units in the force. As will be seen later, this difference complicates matters for the commander. Nevertheless, it is important at this point to notice that the field of safe travel is not merely a subjective experience of the commander but exists as an objective field where the commander's ships can move safely.

THE MINIMUM SAFETY ZONE

In driving, collisions are avoided by one of two methods—changing the direction or stopping the locomotion.[19] Changing direction is done by steering. Sometimes, however, the field of safe travel is cut off, for example, when another car turns onto the road from a side street. In these situations steering is not enough, and the driver has to slow down to avoid a collision. Another field concept describes how drivers decelerate—the "minimum stopping zone," which denotes the minimum spatial field a driver needs to bring the vehicle to a stop (see figure 1).[20] Deceleration (or the degree of braking) is proportional to the speed at which the forward boundary of the field of safe travel approaches the edge of the minimum stopping zone.

The commander uses a related field concept to determine whether action is needed to prevent the high-value units from being sunk—the "minimum safety zone" (see figure 3). The minimum safety zone is a field the size of which is determined by the range of a specific enemy weapon; there exists one minimum safety zone for each type of enemy weapon. The field denotes how close to the high-value units an enemy unit carrying that weapon can be allowed before the enemy unit can sink the high-value units using that specific weapon.[21] For example, suppose an enemy ship has an antiship gun with a range of ten thousand meters. In this case, the minimum safety zone for that gun would be a circle with a radius of ten thousand meters around each high-value unit.

From this it follows that there exist as many fields of safe travel as there are minimum safety zones; minimum safety zones and fields of safe travel always come in pairs. For example, the enemy may have a long-range antiship missile that can be fired from surface ships and a medium-range torpedo that can be fired from submarines. This creates two separate pairs of fields of safe travel and minimum safety zones—one for the antiship missile and one for the torpedo. Consequently, to make sure that the high-value unit is not sunk, *each minimum safety zone must be completely contained within its corresponding field of safe travel* for the duration of the voyage.

Also, the shape of the minimum safety zone varies according to the type of weapon it represents (see figure 3). The shape is determined by the relative speeds of the weapon and the target and their relative headings when the weapon is fired. Suppose a high-speed antiship missile is fired toward a slow-moving high-value unit (see figure 3a). It will take the missile about five minutes to reach its target if the speed of the missile and the range to the target are, respectively, 645 knots and about fifty-four nautical miles. The distance the high-value unit can move during this time at twenty-five knots is about four thousand meters. Thus, the

FIGURE 3

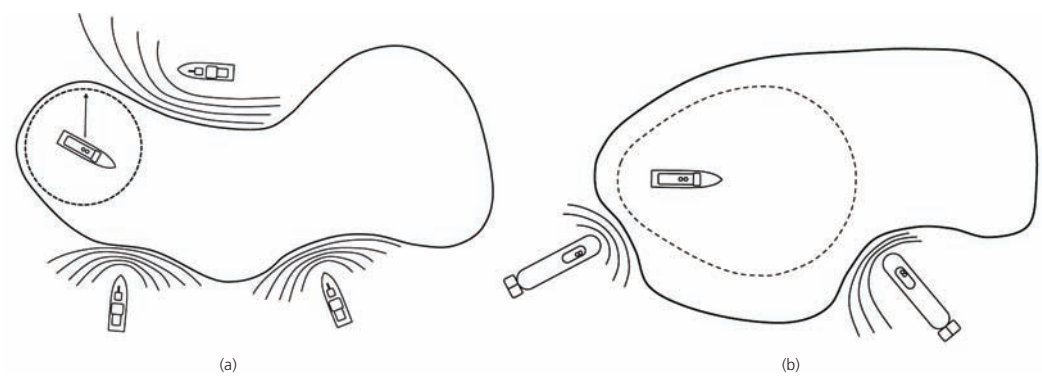

The dotted line denotes the minimum safety zone. Its size is determined by the range of an enemy weapon. The minimum safety zone must be completely contained within its corresponding field of safe travel for the duration of the transit, or there will be a risk of loss. In (b) the shape of the minimum safety zone depends on the relative velocities (speed and firing angle) of the weapon and high-value units. To fire a torpedo when the target is moving away, the submarine must come much closer than must a submarine firing at a target moving toward it.

difference in time between when the missile is fired with the high-value unit heading toward it or moving away is negligible; the minimum safety zone can be considered circular. Now consider firing a medium-range torpedo at the same high-value unit. The torpedo has a speed of, say, fifty knots and a range of twenty-five nautical miles. If the enemy unit fires this torpedo when the high-value unit is heading toward it the theoretical range becomes about thirty-seven nautical miles (it takes thirty minutes for the torpedo to travel its maximum distance, in which time the high-value unit can move 12.5 nautical miles closer). On the other hand, if it fires when the high-value unit is moving away, the range drops to only 12.5 nautical miles. Thus, the shape of the minimum safety zone for the torpedo will be more or less elliptical, with the high-value unit positioned toward its far end (see figure 3b).

What minimum safety zone the commander uses when encountering a new contact depends on how well the contact is classified. If the commander knows what type of enemy unit is approaching, the proper, specific minimum safety zone is applied. If there is uncertainty, the commander must assume the largest minimum safety zone for that class of contacts. For example, if the commander knows that only surface ships can carry long-range antiship missiles, the minimum safety zone for those missiles must be assumed for an unidentified radar contact—that is, of the class of surface contacts. For the submarine screen, however, the minimum safety zone can be based on the medium-range torpedo—the class of underwater contacts.

For the driver of an automobile, braking is a reaction to the threat of crashing into an object and it is initiated when the forward boundary of the field of safe travel recedes toward the minimum stopping zone. In a similar way, the commander of a naval operation reacts when the field of safe travel recedes toward the minimum safety zone—that is, when a threat develops toward the high-value units. In contrast to the automobile driver, however, the commander has three ways of handling a threat: move the high-value units away from the threat, order subordinate units to take action against the threat, or receive the attack and defend. Either way, to establish whether a threat is developing, the commander must be able to determine whether the field of safe travel is receding toward the minimum safety zone.

THE FIELD OF SENSORS

To determine whether the field of safe travel is receding toward the minimum safety zone, the commander must be able to observe the objects present in the naval battlefield. Today, the naval battlefield comprises more than just the surface of the sea. Threats of all sorts can come from either beneath the surface or above it. The driver of a car determines from the pertinent visual field whether the field of safe travel is receding toward the minimum stopping zone.[22] For a commander,

however, it is not possible to perceive directly the elements of the operations area—the naval battlefields are far too vast. Instead, as noted above, the objects present have to be inferred, on the basis of sensor data.[23]

Thus, there exists a "field of sensors" that the commander uses to establish whether the field of safe travel approaches the edge of the minimum safety zone. The field of sensors is an objective spatial field the boundaries of which are determined by the union of the coverage of all sensors that provide data to the commander. The importance of the sensor field is also emphasized in one theory of perception-based tactics that has been advanced (though without discussion of its spatial dimensions).[24] As the sensors that build up the field have different capabilities to detect and classify objects, the field of sensors will consequently consist of regions in which objects can be, variously, detected and classified with varying reliability. (These regions could be seen as fields in their own right, but for now we will leave them as is.) Nevertheless, to establish the boundary of the field of safe travel and determine whether it is receding toward the minimum safety zone, the commander must *organize the field of sensors in such way that it is possible both to detect contacts and to classify them as nonhostile before they get inside the minimum safety zone.*

Factors Limiting Detection

Several factors limit the detection of enemy units. First, terrain features can provide cover. Units that hide close to islands are difficult to detect with radar. In a similar way, a submarine that lies quietly on the bottom is difficult to distinguish from a rock formation with sonar. The weather is another factor: high waves make small targets difficult to detect; fog and rain reduce visibility for several sensors, such as visual, infrared, and radar; and temperature differences between layers in the atmosphere and in the water column influence how far sensors can see or hear. Yet another factor is stealth, or camouflage, whereby units are purposely designed to be difficult to detect with sensors. Sharp edges on a ship's hull reflect radar waves in such ways that they do not return to the transmitting radar in detectable strength. Units are painted to blend into the background, propulsion systems are made silent, ships' magnetic fields are neutralized, and exhaust gases are cooled—all to reduce the risk of detection. Being aware of these factors makes it possible for commanders to use them to advantage. Units might be positioned close to islands while protecting the field of safe travel, or the high-value units might select a route that will force the enemy units to move out at sea, thus making themselves possible to detect.

Factors Limiting Classification

To avoid being classified, the basic rule is to not emit signals that allow the enemy to distinguish a unit from other contacts around it. Often naval operations are

conducted in areas where neutral or civilian vessels are present, and this makes it difficult to tell which contacts are hostile. To complicate matters, the enemy can take advantage of this. For example, an enemy unit can move in radar silence in normal shipping lanes and mimic the behavior of merchants, so as to be difficult to detect using radar and electronic support measures. Suppressing emissions, however, only works until the unit comes inside the range where the force commander would expect electronic support measures to classify its radar—no merchant ever travels radar silent. To detect potential threats the commander establishes a "picture" of the normal activities in the operations area. Behavior that deviates from the normal picture is suspect and will be monitored more closely. Thus, contacts that behave as other contacts do will be more difficult to classify.

THE FIELD OF WEAPONS

As mentioned above, the commander has three choices for handling a detected threat: move the high-value units away from the threat, take action to eliminate the threat, or receive the attack and defend. In the two latter cases the threat can be eliminated either by disabling it or by forcing it to retreat. Either way, the commander must have a weapon that can reach the target with the capability to harm it sufficiently. It is immaterial what type of weapon it is or from where it is launched, as long as it reaches the target and harms it sufficiently. Thus, the weapons carried by the commander's subordinate units, or any other unit from which the commander can request fire support, create a "field of weapons" in which targets can be engaged. Like the field of sensors, the field of weapons is a spatial field, bounded by the union of the maximum weapon ranges carried by all units at the commander's disposal. The field of weapons is further built up by the variety of weapons, which means that the field consists of different regions capable of handling different targets. For example, there will be regions capable of engaging large surface ships, regions capable of destroying antiship missiles, and other regions capable of handling submarines. Nevertheless, to prevent the high-value units from being sunk, *the field of weapons must be organized in such way that it is possible to take action against hostile units and missiles before they get inside their corresponding minimum safety zones*. For example, the threat posed by air-to-surface missiles can be dealt with by protecting two minimum safety zones. The commander can take out the enemy aircraft before they get a chance to launch the missile—that is, shoot down the aircraft before they enter the minimum safety zone created by the range of the missile they carry. If this fails the commander can take down the missiles before they hit the high-value units—that is, shoot down the missiles before they get inside the minimum safety zone created by the distance at which the missile can do damage to the high-value units.

It is now possible to specify how the fields of sensors and weapons work together: the field of sensors and the field of weapons must be organized in such a way that for each field of safe travel hostile units can be detected, classified, and neutralized before they enter the corresponding minimum safety zone. One scholar of naval tactics and scouting touches on what can serve as an illustration. Closest to the ships that should be protected is a zone of control where all enemies must be destroyed; outside the zone of control is a zone of influence or competition, something like a no-man's-land.[25] Outside the zone of influence is a zone of interest where one must be prepared against a detected enemy. Scouting in the first region seeks to target; in the second, to track; and in the third, to detect. Important to notice is that the field of sensors and the field of weapons are carried by, tied to, the commander's units, which simultaneously bring the fields to bear with respect to all pairs of fields of safe travel and minimum safety zones. This complicates matters for the commander. As the fields of safe travel and minimum safety zones are stacked, actions taken to tackle a threat to one minimum safety zone may create problems for another. The competition of units between the pairs of minimum safety zones and fields of safe travel may lead to a situation where a managed air-warfare problem creates a subsurface problem. This bedevilment is not unknown to the naval warfare community: "The tactical commander is not playing three games of simultaneous chess; he is playing one game on three boards with pieces that may jump from one board to another."[26]

To illustrate the problem, suppose that the situations in figure 3 occur simultaneously; there is both a surface and a subsurface threat to the high-value unit. In this case the field of sensors has to be organized so that contacts can be detected and classified in a circular field with a radius of a hundred kilometers (for the antiship missile, figure 3a) and also within a smaller and elliptical field (figure 3b, in the torpedo case). For example, radars and electronic support measures have to be deployed to detect and identify surface contacts, while sonar and magnetic-anomaly detection have to be used to secure the subsurface field. Accordingly, the field of weapons has to be organized so that contacts can be engaged before entering the respective minimum safety zones—antisubmarine weapons for subsurface threats and antiship weapons for surface threats.

Not only weapons can be used to shape the field of safe travel; another means to influence it is deception. Deception takes advantage of the inertia inherent in naval warfare. First, there is the physical inertia whereby a successful deception draws enemy forces away from an area, giving an opportunity to act in that area before the enemy can move back. Second, there is the cognitive inertia of the enemy commander. It takes some time before the deception is detected, which gives further time. Deception can, thus, be seen as a deliberate action within the enemy's field of sensors to shape the field of safe travel to one's own advantage. For successful deception it is necessary that commanders understand how their

own actions will be picked up by the enemy's field of sensors and that they be aware of both the enemy's cognitive and physical inertia. The commander has to "play up" a plausible scenario in the enemy's field of sensors and then give the enemy commander time to decide that action is needed to counter that scenario (cognitive inertia) and then further time to allow the enemy units to move in the wrong direction (physical inertia). The central role of inertia will be further discussed later.

Having defined the fundamental fields it is now possible to formulate what is required from commanders to establish sea control. The skill of securing control at sea consists largely in *organizing a requisite set of pairs of correctly bounded minimum safety zones and corresponding fields of safe travel shaped to counter actual and potential threats, and in organizing the field of sensors and field of weapons in such way that that for each field of safe travel, hostile contacts can be detected, classified, and neutralized before they enter the corresponding minimum safety zone.*

FACTORS LIMITING THE FIELD OF SAFE TRAVEL

So far it has been said that it is the enemy that limits and shapes the field of safe travel. This is, however, not the whole truth. The field of safe travel is also shaped by other physical and psychological factors.

Terrain Features That Reduce Capability to Detect and Engage Targets. To be able to sink the high-value unit the enemy must detect, classify, and fire a weapon against it. All this must happen in rapid succession, or the high-value unit may slip out of the weapon's kill zone. This means that to fire a weapon against the high-value unit the enemy must organize its field of sensors and its field of weapons so that they overlap the high-value unit at the time of weapon release. In this way the field of safe travel is built up by all the paths that take the high-value unit outside the intersection of the enemy's field of sensors and the enemy's field of weapons. This further means that the boundaries of the field of safe travel are determined in part by terrain regions where high-value units can go but enemy weapons cannot engage them—for example, an archipelago that provides protection against radar-guided missiles. The boundaries are also determined by the enemy's capability to detect the high-value units, and thus terrain features can also delimit the field of safe travel in that they protect the high-value units from detection. For example, the archipelago mentioned above also provides protection against detection by helicopter-borne radar, as long as the ships move slowly. (If they start to move quickly, however, they will stand out from the clutter of islands.) It is also important to notice that a minimum safety zone is resized in the same way as the corresponding field of safe travel—if the enemy cannot see the high-value unit or has no weapon that can engage it, the enemy unit can be allowed closer in.

Terrain Regions Where Enemy Units Can Hide. Like enemy units, potential threats also throw out lines of clearance. One such potential threat is a terrain feature where the enemy might have concealed units and from which attacks can be launched (see figure 4a). Such regions—for example, islands where enemy units can hide close to land—contain *potential* threats. There may or may not be actual threats there, the objective field of safe travel may or may not be clear, but since commanders can only react to their subjective fields, the latter are properly shaped and limited by these barriers.

Enemy Units That Are Spotted and Then Lost. Another potential threat that will radiate clearance lines arises from the movement of enemy units. It is possible for a contact that has been detected and classified to slip out of the field of sensors —for instance, by turning off its radar after being tracked by electronic support measures. The potential movement of such a unit shapes the field of safe travel. Suppose an enemy unit was detected at position *p* at time *t* (see figure 4b). As the enemy is outside the field of safe travel, it does not pose a threat to the commander at this time. Now, the contact slips out of the field of sensors, and contact with it is lost. As time passes and the commander fails to reestablish contact, the region where the unit can be is a circle that grows proportionally to the maximum speed of the enemy unit. Eventually the region grows to such a size that it is not possible for the force to pass without the minimum safety zone intersecting with it. In figure 4b the subjective field of safe travel is correctly shaped by the potential threat, but the objective field of safe travel is clear—the enemy unit has turned around and is heading away.

Legal Obstacles and Taboos. The field of safe travel is also limited by international law. One such legal obstacle is the sea territory of neutral states. A neutral state has declared itself outside the conflict the commander is involved in, and

FIGURE 4

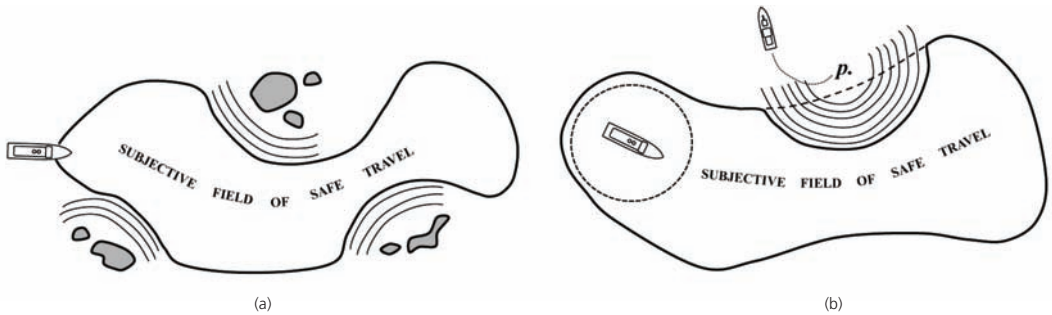

Terrain features that serve as good attack points for the enemy also radiate lines of clearance, and they shape the field of safe travel (a); enemy units may or may not be present. In (b) the field of safe travel is impinged by the potential location of enemy units. When an enemy unit slips out of the field of sensors, it creates an area of potential threat that grows as time passes. These potential threat areas also determine the boundaries of the commander's subjective field, although here the enemy never encroached on the objective field and is now well clear of it.

this prohibits the parties of the conflict from using its sea territory for purposes of warfare. Such regions delimit the fields of safe travel and thus restrict where the commander's units can move. On the other hand, they do not pose a threat to the high-value units and can safely be allowed to encroach on the minimum safety zone.

Neutral Units in the Operations Area. Today, as noted, naval operations take place in areas where neutral shipping is present. Like the sea territory of neutral states, neutral shipping is protected by international law. A consequence of this is that neutral shipping in the area also influences the shape of the field of safe travel. The commander is of course prohibited from attacking neutral merchants. This is not a problem in itself—if a certain contact is classified as neutral, we cannot engage it. Nevertheless, it has implications for where high-value units are allowed to move. As neutral shipping cannot be engaged, we are forbidden to use it for cover—for instance, to move so close to a merchant vessel as to make it difficult for the opponent to engage without risk of sinking the merchant. This means that neutral shipping creates "holes" in the field, where combatants are not allowed to move. If the commander does not track the merchant vessels continuously, these holes grow proportionally to the merchants' maximum speed, as they do for enemy units spotted and then lost.

Mines. Mines shape the field in the same way that ships do. They can be seen as stationary ships with limited weapon ranges; the minimum safety zone for a mine would be the range at which a ship could pass it without being damaged if the mine detonated. Laying mines shapes the commander's field, and the commander must react, either by taking another route or by actively reshaping the field—that is, by clearing the mines. Clearing mines has the same effect as taking out enemy ships; the field of safe travel expands into the area that has been cleared. Of course, the enemy can use this for purposes of deception, pretending to lay mines, sending a unit zigzagging through a strait, and making sure that the commander's field of sensors picks this up. If the deception is successful, the commander's subjective field is shaped incorrectly.

THE COGNITIVE PROBLEMS FACING THE COMMANDER

There are two important aspects that make the commander's situation different from the automobile driver's. First, as we have seen, the commander does not have direct perceptual access to the fields in the same way as a driver has. Second, it takes the commander longer to react to changes in the fields and to influence their shapes. Together these properties create a significant cognitive problem.

As mentioned earlier, the commander must access the objects and the environment indirectly. This defines the first problem that has to be solved: How does

one create a representation of the environment, based on information provided by the fleet's sensors, that allows the commander to see the field of safe travel? The basic building blocks are already in place in the navies of today. To provide the commander with a view of the battlefield, information provided by the fleet's sensors is merged and displayed on screens in the warships' combat information centers. The idea is that all ships should share the same merged view of the battlefield—the common operational picture (COP)—to allow unambiguous coordination, tracking, and targeting. At any moment, the COP is the best possible view of the battlefield that the force can produce; it contains all contacts that are tracked by the force, together with information about their types (such as cruisers, destroyers) and identities (unidentified, friendly, or suspect). It is the information provided by COP that the commander uses to see the field of safe travel. The problem, of course, is how best to display the fields. That is an empirical question that remains to be solved elsewhere; nevertheless, we can suggest a beginning.

The second problem with which the commander has to cope is the time it takes to influence the shapes of the fields—they all have some inherent inertia. In principle there is no difference between the tasks the commander must solve and those of a driver of a car. Both must react to changes in the field of safe travel. The major difference lies in the speed with which the shape of the fields changes—the commander's field changes much more slowly. Its greater inertia arises from the fact that the naval battlefield is large compared to how fast the units in it can move. This is in stark contrast to the situation facing an automobile driver, for whom the field changes quickly but who can react quickly, adapting speed or heading to accommodate the changes. Most of the time this is no problem, because the field does not change faster than the driver can react; if it does, driving becomes dangerous.

The commander faces exactly the same problem. To get the high-value units safely to their destinations, the commander must adapt to changes in the field or take action to shape it appropriately. If the commander does not react in time, enemy units may get to positions where they can engage the high-value units. In that situation, the operation becomes dangerous.

To illustrate the differences, however, consider a driver who in a fraction of a second sees a car pull out at a corner and encroach on the field of safe travel. The driver reacts immediately and starts turning the steering wheel. Instantly the driver's car starts turning, and after a few moments the new heading brings the car to the middle of the field. Everything is over in a matter of seconds. For a commander the time scale is completely different. A subordinate unit must first detect an approaching enemy. The contact must be checked to make sure it is not the same as an old one, and a new track has to be created at its position. The new track must be sent to the fleet's information-merge point, where it is integrated in

the COP. The updated COP has to be transmitted to the rest of the fleet, at which point it is possible for the commander to see the change in the field. Now the commander must decide what to do (move away or attack), formulate an order, transmit the order, and make sure that the recipient understands the order. The recipient now has to execute the order. This may include moving to an appropriate position, obtaining targeting information, preparing an appropriate weapon, and then engaging the target. The effects of the action have to be evaluated. Did we hit the target, or did we miss? Scouting the effects of a weapon engagement takes time, and it is only some time thereafter that the effects can be determined. The effects are reported back to the commander, who can then decide whether the actions taken have shaped the field appropriately. It is evident that the time delays facing a commander are on a completely different scale from those of a car driver.

To handle the time delays and make it possible to react in time, the commander must create extra space between the boundary of the field and the edge of the minimum safety zone. How deep this buffer zone must be depends on how fast the commander can react and counter an emerging threat. If units are in position to cover a flank, the readiness on that flank is high, and the buffer zone may be shallow. On an unprotected flank, to which it would take time to move units in case of a threat, the buffer zone has to be deeper. Inertia can, however, also be used to the commander's advantage. It is possible to concentrate forces in one section of the field, push the enemy back, and make the field bulge out. The bulge creates time for the high-value units to sneak by, while escorting forces regroup and put pressure on another part of the field.

On a superficial level this might seem a simple task. It is, however, well established that time delays are one of the most difficult things for humans to cope with when facing a dynamic decision-making problem.[27] This gives reason to believe that time delays in the sea-control task will create problems for the commander. To cope with them the commander must plan ahead. As illustrated, it is sometimes necessary to initiate action hours before it is expected that the effects will be needed. This means that the commander must anticipate potential threats long before they materialize. Areas where the enemy may threaten the high-value units have to be identified beforehand, and offensive action has to be taken to clear that area. Deceptive missions must be conducted to draw the enemy away from critical regions so as to buy time. It is the inertia of naval warfare that forces the commander to shape the field actively. Simply reacting to changes works only if the commander has abundant resources compared to those of the enemy.

STUDYING THE PROBLEMS COMMANDERS FACE IN SEA CONTROL

An early argument of this article was that researchers need a description of the sea-control task to be able to investigate systematically commanders' performance

in solving it. What does this new approach actually contribute? First, it may guide thinking about sea control, as it explicitly states what variables are of interest and so offers a tool for structured investigation. The variables—the field of safe travel, the minimum safety zone, the field of sensors, and the field of weapons—can be varied systematically to determine the effects of these variations on the commander's ability to solve the sea-control task. Second, because the variables can be measured from the outside, researchers can observe whether commanders have established sea control without asking them. By this, it is possible to determine whether a commander—who may not be able to see the field of safe travel properly—has failed to establish control. Commanders may believe they have control but do not—that is, their subjective fields cover all minimum safety zones, but the objective fields do not. By backtracking from this event the researcher can analyze and understand why this happened. If several commanders run into the same problem, that problem may be a candidate for training or support. Third, a shared description allows several researchers to approach a problem from the same perspective. This may lead to cumulative growth of knowledge.

As an example of what explicit models can bring to a discipline, consider decision-making research. Here, the behavior of decision makers has been compared to models of rational decision making, such as predicate logic, statistical models, and expected utility. The models all clearly identify the variables that should be considered and specify the values that produce optimal decisions. Of course, it can be debated to what extent such models (or the one suggested here) actually constitute the golden rule for human task behavior.[28] Nonetheless, a large body of research has been produced thanks to models that explicitly describe what researchers should focus on when investigating a given problem.

As an example of how the model proposed here could be used to investigate the sea-control task, we will consider a situation where participants solve versions of the task in simple war games—"microworlds."[29] The opponents in the games can be humans or algorithms. Human opponents are good for realism, as they may use deception and surprise, while algorithms are good for research reasons, as they allow all participants to face exactly the same opponent.[30] That said, to identify which specific subtasks to address in the experiments we must study what the model puts forward as points of interest. The model suggested here specified that the skill of securing control at sea consists largely in organizing a requisite set of pairs of correctly bounded minimum safety zones and corresponding fields of safe travel shaped to counter actual and potential threats, and in organizing the field of sensors and field of weapons in such a way that for each field of safe travel, hostile contacts can be detected, classified, and neutralized before they enter the corresponding minimum safety zone. From this proposition a set of questions can be derived.

The first question regards the commander's ability to determine the boundaries of the field of safe travel and the minimum safety zone. We have to consider the features that shape the boundaries of the field and create a scenario where the commander must track changes in the field; poor performance here could lead to worse performance in the game overall, perhaps to loss of the ships that are to be protected. An initial scenario could be set on open water, across which the participant has to move a ship from one port to another. During the game enemy ships and aircraft are detected and then lost, and the participant must track how their potential movements influence the field. Failure to stay clear of areas where enemy units could be means a risk of being sunk. The same participant might be given units that could be used to scout these danger areas. This would complicate matters, as the participant now must keep track of both the potential movements of the enemy and how the progress of the scouting reduces the regions where the enemy can be found. To further complicate the task, islands can be added. Islands influence how enemy units can move, which leads to irregular expansion of the regions where they can go.

The second area to investigate would be the commander's ability to organize the field of sensors to determine the boundaries of the field of safe travel. Consider the same game scenario as above, a movement task, but in an archipelagic region and with a more complex sensor setup. The participant's surface radars can detect ships on open sea, but to detect them when they move slowly close to islands the player must move in close enough to see them. As the participant's units move around, the islands obstruct the radars' lines of sight, and as a result enemy units are tracked and lost intermittently. Further, an enemy may slowly move close to islands in order to slip out of radar coverage. Now, the participant must identify the enemy's potential points of attack and either scout those areas more closely or select a route around the threat, if that is possible. The player also can, like the enemy, move "tactically"—slip into cover when threatened, or move slowly close to land, and then "rush" over open patches of water.

Next would be the ability to use the field of sensors to detect and identify enemies. Here the task is complicated by the fact that not every contact is an enemy. The scenario could envision an area where neutrals are present, though in all other respects the same as above. The participant would get a chance to establish a "normal picture" of the area; then enemies would be introduced. Now the focus is the player's ability to determine the boundaries of the field of safe travel when there is uncertainty as to which contacts actually shape it. The neutral units slipping into and out of the different zones—detection and identification—of the field of sensors presumably complicates the task.

The above are just a few simple examples of how the model could be used to guide investigations of sea control. Still to be considered is of course the ability

to use the field of weapons to shape the field of safe travel. More complex investigations could focus on how the sensor and weapon fields are used together. For example, to get a radar-silent contact that moves among merchants to reveal its identity, the participant may illuminate it with a fire-control radar to see whether the threat of being targeted triggers defenses. Of interest is also the potential competition between different fields of safe travel. Because the participant's units "carry" the fields, the existence of two simultaneous threats against different fields creates problems if the same unit must handle both. How does the player handle dual threats with limited resources? Still, and despite their simplicity, these examples give some idea of how the model could be used to derive hypotheses that can be investigated in the laboratory. By pointing out the variables of interest and stating what is required of a commander to solve the task, the model may extend our understanding of how to establish sea control.

COGNITION, TRAINING, AND PRACTICE

Changing the perspective to the commander makes clear what a commander can actually achieve, practically. Earlier descriptions of sea control were silent on the amount of resources needed to establish it even to a very limited degree. Looking at the problem through the eyes of the commander makes obvious the magnitude of resources required to defend only one field.

It further makes clear what the commander is required to accomplish cognitively. Today there is considerable agreement on the characteristics that distinguish the two types of cognitive processes—intuition and reasoning.[31] Intuition is difficult to control and is typically fast, automatic, effortless, associative, and governed by habit. Reasoning, on the other hand, is deliberately controlled but slower, serial, and effortful. From a cognitive perspective, the purpose of training is to turn reasoning tasks into intuitive tasks—an expert knows immediately what to do where a beginner may require an hour to figure out a course of action. Keeping track of all relevant fields is a complex matter, and the time even the most experienced commanders need to perform it implies that establishing sea control is largely a reasoning task. This means that commanders have to create some form of cognitive representation of the task, which in turn makes them potential victims of the limitations of human reasoning.[32]

To support commanders with tactical decision aids, one can either assist their cognitive processes in dealing with the actual problem or transform it into a perceptual-motor task that does not require mental representations. Recent research suggests that the latter approach is promising.[33] However, transforming the task only moves the problem: now the question is not cognitive load but how good the representation is and how much the commander trusts it. Consequently, there is no "free lunch," whatever approach we choose. Nevertheless,

transforming the task into something that does not require mental representations relieves commanders of that much and gives them time to concentrate on other aspects of the job.

There is also another issue regarding tactical decision aids: it may be possible to determine what variables to include in the field representations, but there is always uncertainty regarding their values. These uncertainties can be handled only by introducing safety margins, as drivers might handle uncertainties about their reaction times. Still, it is probably worthwhile to devise training and support systems for the sea-control task, especially for situations in which the commander has less time to react, as may be the case in littoral waters.

There has been some effort to assess how field representations could be useful as tactical decision aids. Following the line of research mentioned above, this author has investigated whether visualizing the field of safe travel would help a commander in tactical situations where enemy units were first spotted and then lost.[34] The studies were designed as experiments and used two different tasks that the participants had to solve in a microworld. Two experiments used a search task in which the participant had to locate submarines that were trying to escape the player's destroyers in an area with islands. Two more involved a transportation task, where the participants had to guide a transport ship from one port to another while staying clear of several submarines that would try to sink it. The decision-aid visualization that was being evaluated displayed the area where the enemies could be and expanded that area as time passed. The results suggested that the visualization was effective in both tasks and that university students and naval officers alike gained from using it. These studies are by no means a complete demonstration of a support system for the sea control task, but they give some ideas of what a tactical decision aid could look like.

The field of safe travel, it has been suggested, is applicable to all kinds of locomotion.[35] Researchers have stated that the task facing an infant learning to walk is in principle the same as the one facing an open-field runner in football or the operator of an automobile—the basic concepts of terrain, destination, obstacle, collision, and path apply to all. A similar claim can be made when it comes to the task of establishing control over a region of space. The concepts of enemy, sensors, and weapons should be applicable, whether a convoy of trucks is to be protected against ambush or a squadron of attack aircraft is to be escorted to a target. The problem of establishing a requisite set of fields of safe travel and minimum safety zones would be the same in all those tasks. The analysis also applies to situations where the high-value units are stationary; whether they move or stand still does not influence the fields. Accordingly, it would be relevant for protecting a naval base, an archipelagic region, or a nuclear power plant.

Nevertheless, before saying anything conclusive about the generalizability of the model, it must be put to practical use. Only then can we determine its utility when it comes to extending our understanding of sea control in littoral waters.

NOTES

I want to thank Professor Berndt Brehmer for valuable comments on several versions of the manuscript. Also, Captain Magnus Waldenström, RSwN (Ret.), and Lieutenant Commander Carl Sandstedt, RSwN, have contributed much. I also want to thank Captain Robert C. Rubel, USN (Ret.), and Captain Wayne P. Hughes, USN (Ret.), for helping me shape the article for publishing. Finally, I want to thank two anonymous reviewers for suggestions as to how to improve the manuscript.

1. Robert C. Rubel, "Talking about Sea Control," *Naval War College Review* 63, no. 4 (Autumn 2010), pp. 38–47.
2. Ibid.; Wayne P. Hughes, Jr., *Fleet Tactics and Coastal Combat* (Annapolis, Md.: Naval Institute Press, 2000).
3. Sir Julian Corbett, *Some Principles of Maritime Strategy* (1911; repr. Annapolis, Md.: Naval Institute Press, 1988), pp. 122–24.
4. Ibid.
5. For descriptions of littoral navies, see, among others, J. Børresen, "The Seapower of the Coastal State," *Journal of Strategic Studies* 17, no. 1 (1994), pp. 148–75; Tim Sloth Joergensen, "U.S. Navy Operations in Littoral Waters: 2000 and Beyond," *Naval War College Review* 51, no. 2 (Spring 1998), pp. 20–29.
6. Hughes, *Fleet Tactics and Coastal Combat;* Milan Vego, *Naval Strategy and Operations in Narrow Seas,* 2nd ed. (Portland, Ore.: Frank Cass, 1999); John F. G. Wade, "Navy Tactics, Doctrine, and Training Requirements for Littoral Warfare" (thesis, U.S. Naval Postgraduate School, Monterey, Calif., June 1996); V. Addison and D. Dominy, "Got Sea Control?," U.S. Naval Institute *Proceedings* 136, no. 3 (2010).
7. See the discussion of the C4ISR (command, control, communications, computers, intelligence, surveillance, and reconnaissance) system as an artifact in Berndt Brehmer, "Command and Control Research Is a 'Science of the Artificial'" (paper delivered to the fifteenth International Command and Control Research and Technology Symposium, Seattle, Wash., 2010).
8. An example that has generated a Nobel Prize winner is "heuristics and biases" decision-making research, where human judgment is compared to statistical models. See D. Kahneman, P. Slovic, and A. Tversky, *Judgment under Uncertainty: Heuristics and Biases* (New York: Cambridge Univ. Press, 1982); and T. Gilovich, D. Griffin, and D. Kahneman, eds., *Heuristics and Biases* (New York: Cambridge Univ. Press, 2002). For a more general overview, see, for example, Paul R. Kleindorfer, Howard C. Kunreuther, and Paul J. Schoemaker, *Decision Sciences: An Integrative Approach* (Cambridge, U.K.: Cambridge Univ. Press, 1993).
9. U.S. Navy Dept., *Naval Warfare,* Naval Doctrine Publication 1 (Washington, D.C.: 2010) [hereafter NDP-1], p. 28.
10. Ministry of Defence, *British Maritime Doctrine (BR1806),* 3rd ed. (Norwich, U.K.: by command of the Defence Council, 2004), pp. 41–42.
11. North Atlantic Treaty Organization, *Allied Joint Maritime Operations,* AJP 3.1 (Brussels: NATO Standardization Agency, 2004), chap. 1, p. 8.
12. Addison and Dominy, "Got Sea Control?"
13. As it was necessary for Ptolemy to introduce epicycles in order to handle the irregular movement of planets in his geocentric description of the solar system.
14. Addison and Dominy, "Got Sea Control?"
15. There are several analyses that describe the kinds of missions a commander has to execute in order to achieve sea control. See, for example, Frank Uhlig, "How Navies Fight, and Why," *Naval War College Review*

48, no. 1 (Winter 1995), pp. 34–49; Uhlig, "The Constants of Naval Warfare," *Naval War College Review* 50, no. 2 (Spring 1997), pp. 92–105; and NDP-1. What missions have to be executed, however, do not constitute a description of what has to be accomplished in order to establish sea control. The missions that can be executed represent the *means available* to establish sea control—that is, the commander's ways of bringing about the state of sea control.

16. J. Gibson and L. Crooks, "A Theoretical Field-Analysis of Automobile-Driving," *American Journal of Psychology* 51, no. 3 (July 1938), pp. 453–71.
17. Ibid., p. 454.
18. The concept of "valence" is from ibid., p. 455.
19. Ibid., p. 456.
20. Ibid., p. 457.
21. The "minimum safety zone" is just another term describing how far out from the field of safe travel an enemy contact starts to encroach on it. To use the field and anchor it to the high-value units is convenient, however, and makes it possible to use the same concept for all enemy weapons, antiship missiles as well as mines. Further, the observations of naval officers when they solve sea-control tasks have revealed that they use tools in the command-and-control systems on board their ships to visualize these zones—circular regions around high-value units or corridors where high-value units will move.
22. Gibson and Crooks, "Theoretical Field-Analysis of Automobile-Driving," p. 457.
23. Intelligence reports from higher command are also included when constructing this operational view of the battlefield. This operational view of the battlefield is compiled by exchanging and merging sensor data, a partly manual and partly automatic process well known in all navies. The result is usually displayed as a map of the operations area overlaid with symbols representing the objects present in varying stages of classification—detected, classified, or identified.
24. T. Taylor, "A Basis for Tactical Thought," U.S. Naval Institute *Proceedings* (June 1982).
25. Hughes, *Fleet Tactics and Coastal Combat.*
26. Ibid., p. 196.
27. Berndt Brehmer, "Feedback Delays in Complex Dynamic Decision Tasks," in *Complex Problem Solving: The European Perspective,* ed. Peter A. Frensch and Joachim Funke (Hilldale, N.J.: Lawrence Erlbaum, 1995), pp. 103–30; Brehmer, "Dynamic Decision Making in Command and Control," in *The Human in Command: Exploring the Modern Military Experience,* ed. Carol McCann and Ross Pigeau (New York: Kluwer Academic / Plenum, 2000); J. Sterman, "Misconception of Feedback in Dynamic Decision Making," *Organizational Behavior and Human Decision Processes* 43, no. 3 (1989), pp. 301–35; L. Sweeney and J. Sterman, "Bathtub Dynamics: Initial Results of a Systems Thinking Inventory," *System Dynamics Review* 16, no. 4 (September 2000), pp. 249–86.
28. See, for example, M. Cohen, "Three Paradigms for Viewing Decision Biases," in *Decision Making in Action: Models and Methods,* ed. Gary A. Klein (Norwood, N.J.: Ablex, 1993), pp. 36–50; G. Gigerenzer and R. Selten, *Bounded Rationality: The Adaptive Toolbox* (Cambridge, Mass.: MIT Press, 2002).
29. "Microworld" denotes a computer simulation that is specifically designed to study humans' ability to control dynamic systems. The term is appropriate here too, as the war games used in the experiments probably contain several functions for tracking and visualizing the different fields. They will probably be less realistic than "normal" war games, to allow for a cleaner study of the participants' behavior in relation to the microworld. For discussions on the use of microworlds, see Berndt Brehmer and D. Dörner, "Experiments with Computer-Simulated Microworlds: Escaping Both the Narrow Straits of the Laboratory and the Deep Blue Sea of the Field Study," *Computers in Human Behavior* 9, nos. 2–3 (Summer/Autumn 1993), pp. 171–84; and Brehmer, "Microworlds and the Circular Relation between People and Their Environment," *Theoretical Issues in Ergonomics Science* 6, no. 1 (January–February 2005), pp. 73–93.
30. To be more precise: algorithms are good for analysis reasons, since they add no variance to the experiment, as a human opponent would. Consequently, algorithms increase the power of the experiment. The risk, however, is that over repeated games humans may learn how the algorithm works, which can pollute the

results. In those situations, human opponents are recommended.

31. D. Kahneman, "A Perspective on Judgment and Choice: Mapping Bounded Rationality," *American Psychologist* 58, no. 9 (September 2003), pp. 697–720.

32. For descriptions of humans' cognitive limitations, see, for example, D. Dörner, *The Logic of Failure: Recognizing and Avoiding Error in Complex Situations* (New York: Metropolitan Books, 1996); Kahneman, Slovic, and Tversky, *Judgment under Uncertainty;* and J. Reason, *Human Error* (New York: Cambridge Univ. Press, 1990).

33. J. Rasmussen, A. Pejtersen, and L. Goodstein, *Cognitive Systems Engineering* (New York: Wiley, 1994); K. Vicente, *Cognitive Work Analysis* (Mahwah, N.J.: Lawrence Erlbaum, 1999); K. Vicente and J. Rasmussen, "Ecological Interface Design: Theoretical Foundations," *IEEE Transactions on Systems, Man, and Cybernetics* 22, no. 4 (July/August 1992), pp. 589–606.

34. See C. Waldenström, "Visualizing a Time-Space Constraint Increases Performance in a Dynamic Search Task," *Journal of Cognitive Engineering and Decision Making* 4, no. 4 (Winter 2010), pp. 275–87; Waldenström, "Supporting Dynamic Decision Making in Naval Search and Evasion Tasks" (Stockholm Univ., November 2011); Waldenström, *Visualizing the Field of Safe Travel Increases Performance in a Naval Movement Task (CogSIMA)* (n.p.: IEEE Communications Society, 2011); and Waldenström, "Constraint Visualization Increases Performance for Navy Officers and Novices in a Naval Search Task" (paper delivered at the tenth Conference on Naturalistic Decision Making, Orlando, Fla., 2011).

35. Gibson and Crooks, "Theoretical Field-Analysis of Automobile-Driving," pp. 453–71.